PLC

MARK: _____

PROJECT: _____

DATE: _____

Centrifugal Plenum Fan
Side Mount
Arrangement 3S
Class II

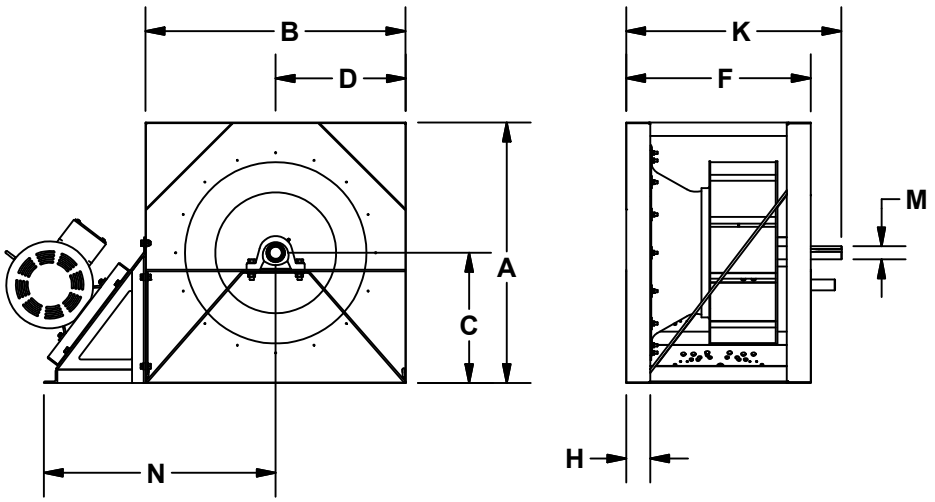

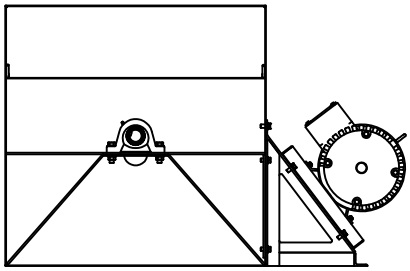

Motor Position
"R" Shown

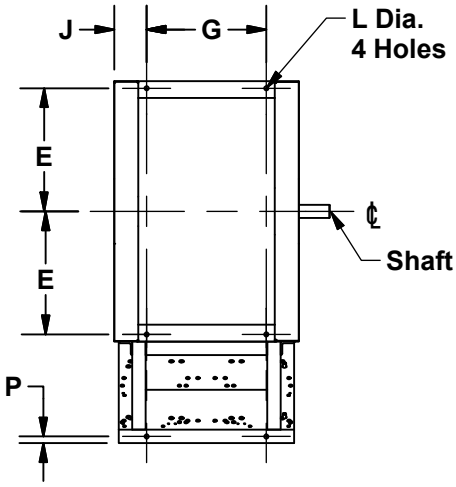

STANDARD CONSTRUCTION FEATURES:
UL 705 Listed - AMCA Air and Sound certified performance - Heavy duty structural steel frame with heavy gauge inlet panels welded at all connections - Continuously welded, airfoil wheel - Heavy gauge spun aluminum inlet cone.

DIMENSION DATA

Size	A	B	C	D	E	F	G	H	J	K	L	M	N	P	Unit Wt.
120	17 1/4	17 1/4	8 5/8	8 5/8	7 11/16	13 1/16	7 7/16	1 13/16	2 13/16	17 5/16	5/8	1 7/16	16 3/4	5/8	120
135	19 1/2	19 1/2	9 3/4	9 3/4	8 13/16	14 5/8	8 1/2	2 1/16	3 1/16	18 7/8	5/8	1 7/16	18 5/8	5/8	153
150	21 1/2	21 1/2	10 3/4	10 3/4	9 13/16	15 9/16	9 7/16	2 1/16	3 1/16	19 13/16	5/8	1 7/16	20 1/8	5/8	180
165	23 3/4	23 3/4	11 7/8	11 7/8	10 15/16	16 3/4	10 5/8	2 1/16	3 1/16	21	5/8	1 7/16	21 3/4	5/8	217
180	25 3/4	25 3/4	12 7/8	12 7/8	12	19 7/8	11 3/4	3 1/16	4 1/16	24 1/8	5/8	1 7/16	23 1/4	5/8	289
195	28	28	14	14	13 1/8	21	12 7/8	3 1/16	4 1/16	25 1/4	5/8	1 7/16	25	1	330
210	30	30	15	15	14 1/8	22 1/16	13 15/16	3 1/16	4 1/16	26 7/16	5/8	1 7/16	26 1/2	1	374
225	32 1/4	32 1/4	16 1/8	16 1/8	15 1/4	23 1/16	14 15/16	3 1/16	4 1/16	27 7/16	5/8	1 11/16	28 1/8	1	407
245	35	35	17 1/2	17 1/2	16 3/8	24 1/2	15 7/8	3 1/16	4 5/16	29	5/8	1 15/16	30 1/8	1	505
270	38 3/4	38 3/4	19 3/8	19 3/8	18 1/4	27 7/16	17 13/16	3 9/16	4 13/16	32 1/16	5/8	1 15/16	34 1/2	1	653
300	43	43	21 1/2	21 1/2	20 3/16	29 1/2	19 3/8	3 9/16	5 1/16	34 1/4	5/8	2 3/16	35 5/8	1	741
330	49 1/2	46	23 5/8	23	22 1/4	34 3/16	27 3/8	4 9/16	5 11/16	39 1/16	15/16	2 3/16	37 5/8	1	807
365	53 1/2	49	26 1/8	24 1/2	23 3/4	36 5/8	29 13/16	4 9/16	5 11/16	41 5/8	15/16	2 3/16	40	1	891
402	60	54	28 3/4	27	26 1/8	40 15/16	33 5/8	5 1/16	6 3/16	46 3/16	15/16	2 3/16	43 7/8	1	1144
445	64	58 1/2	31 7/8	29 1/4	28 3/8	45	36 5/8	6 1/16	7 1/4	50 3/4	15/16	2 7/16	47 1/8	1	1588
490	70	63	35	31 1/2	30 1/2	50 11/16	41 7/8	6 9/16	7 11/16	56 13/16	1 1/16	2 11/16	50 3/8	1	1962
540	75	69	38 5/8	34 1/2	33 1/2	54 3/8	45 1/2	6 9/16	7 3/4	61	1 1/16	2 15/16	54 1/4	1 1/4	2393
600	82	75	42 7/8	37 1/2	36 1/2	59 1/4	49 7/8	7 1/8	8 1/4	66 5/8	1 1/16	3 7/16	57 7/8	1 1/4	3063
660	90	82	47 1/4	41	39 11/16	64 11/16	54 5/16	8 1/8	9 1/4	72 13/16	1 1/16	3 7/16	62 7/8	1 1/2	4229
730	92	92	52 1/4	46	44 11/16	69 3/4	59 5/16	8 1/8	9 1/4	78 7/8	1 1/16	3 7/16	68 1/2	1 1/2	4656

ALL DIMENSIONS IN INCHES. WEIGHTS IN LBS., LESS MOTOR AND SLIDE BASE.