AUD

MARK: _____

PROJECT: _____

DATE: _____

Propeller Upblast
Exhaust Ventilator
Aluminum or Steel
Roof Mounted/Direct Drive

DIMENSION DATA

Size	A Dia.	B	C	D	E	T Sq.	Roof Opening Sq.*	Max. Motor Frame	Unit Wt. Steel	Unit Wt. Alum.
20	29 3/4	17 1/2	47 7/8	4	2	32	27 1/2	184T	115	59
24	33 3/4	19 1/8	48 3/8	4	3	36	31 1/2	184T	137	70
30	39 3/4	23 5/8	54 3/16	3 7/8	3	42	37 1/2	184T	186	96
36	45 3/4	25 5/8	61 1/8	4	3	48	43 1/2	184T	243	125
42	51 3/4	27 5/8	64 5/8	4	3	54	49 1/2	256T	282	145
48	57 3/4	31 1/4	70 13/16	4	3	60	55 1/2	256T	378	192

ALL DIMENSIONS IN INCHES. WEIGHTS IN LBS., LESS MOTOR.
*ROOF OPENING SIZE FOR CURBS SUPPLIED BY COOK ONLY.

STANDARD CONSTRUCTION FEATURES:
Cast Aluminum propeller - Spun Steel Venturi/curb cap - Heavy gauge, painted steel lower drum - 2 point lifting lugs - Painted steel windband - Structural steel power assembly - Butterfly damper doors (24-36 alum., 42-48 galv. steel) - Welded curb cap corners - Corrosion resistant fasteners.

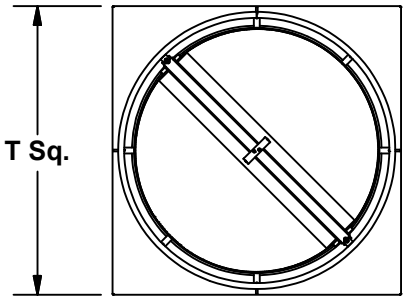

ACCESSORIES
1. NEMA 3 DISCONNECT SWITCH
2. INLET BASKET GUARD
3. DISCHARGE GUARD
4. MAGNETIC LATCHES
5. ACCESS DOOR
6. HINGED SUB-BASE
7. RCG GALVANIZED CURB
8. RCA ALUMINUM CURB
9. EPOXY COATING
10. ANTI-CONDENSATE COATING
11. PHENOLIC EPOXY COATING
12. PRIME COAT

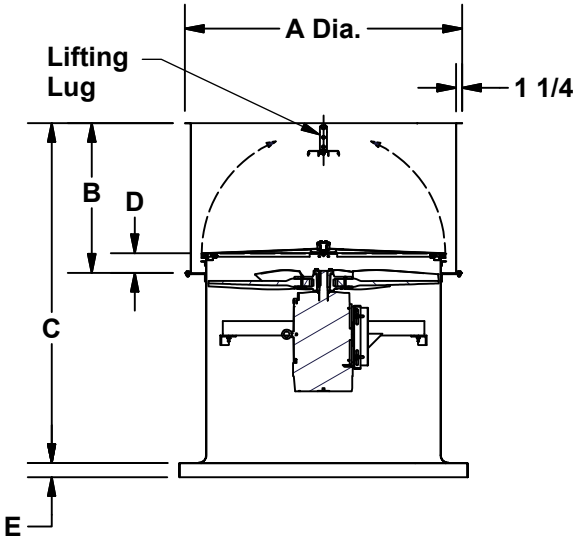

QTY	MARK	CATALOG NUMBER	FAN INFORMATION			MOTOR INFORMATION					ACCESSORIES			
			CFM	SP	RPM	HP	VOLTS	HZ	PH	TYPE				

Side view shows Damper Doors and Motor rotated for clairity.